MFOS WSG May 2010 Panel Version Wiring

(Rear view of panel pots, switches, etc.)

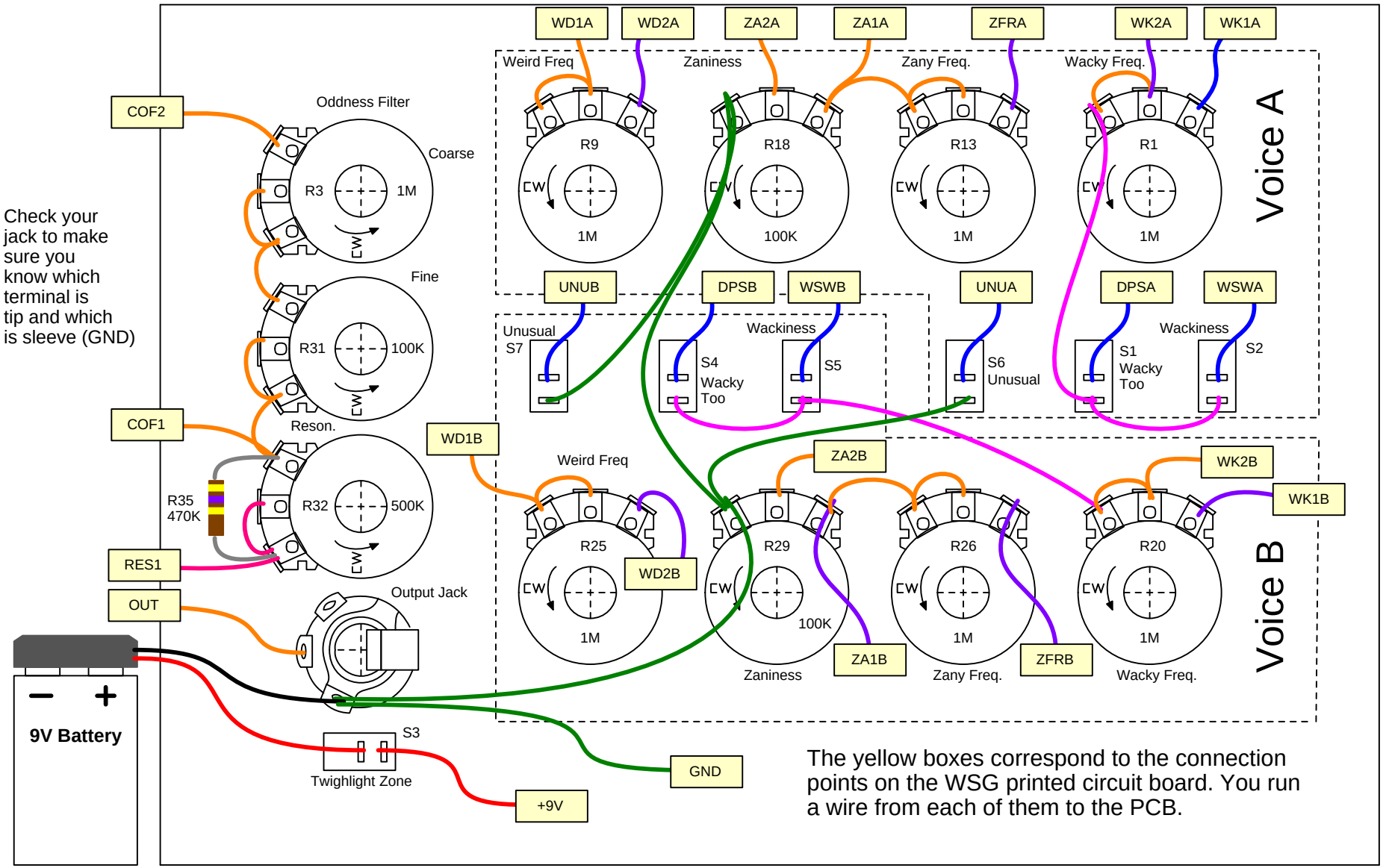

The yellow boxes correspond to the connection points on the WSG printed circuit board. You run a wire from each of them to the PCB.

All material Copyright 2007 Music From Outer Space and Ray Wilson