Low Frequency Oscillator Section

LFO1

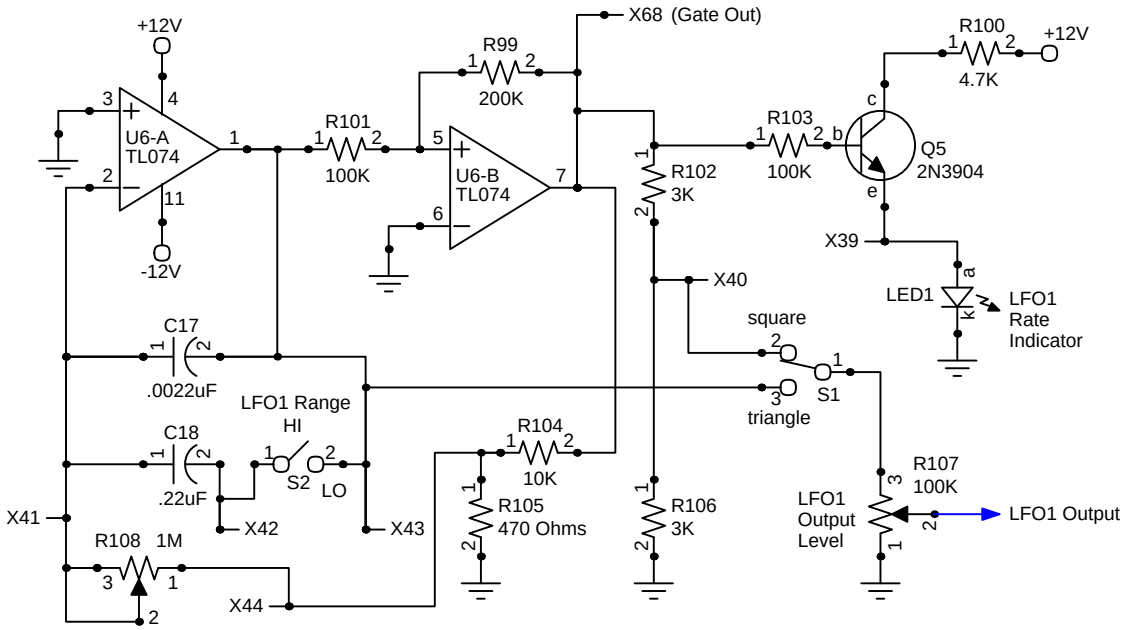

LFO2

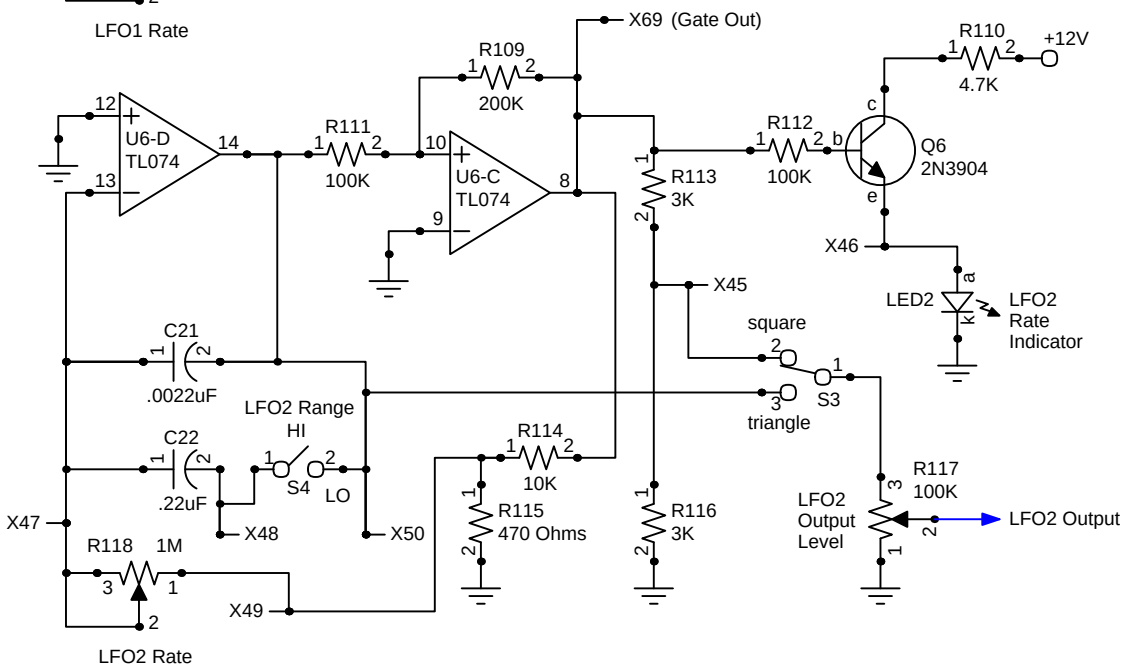

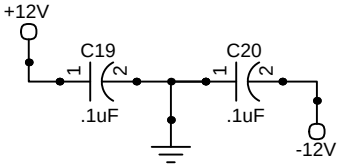

Copyright Music From Outer Space LLC 2010