Sound-Lab Mini-Synth Panel Wiring Diagram

Always triple-check your wiring!

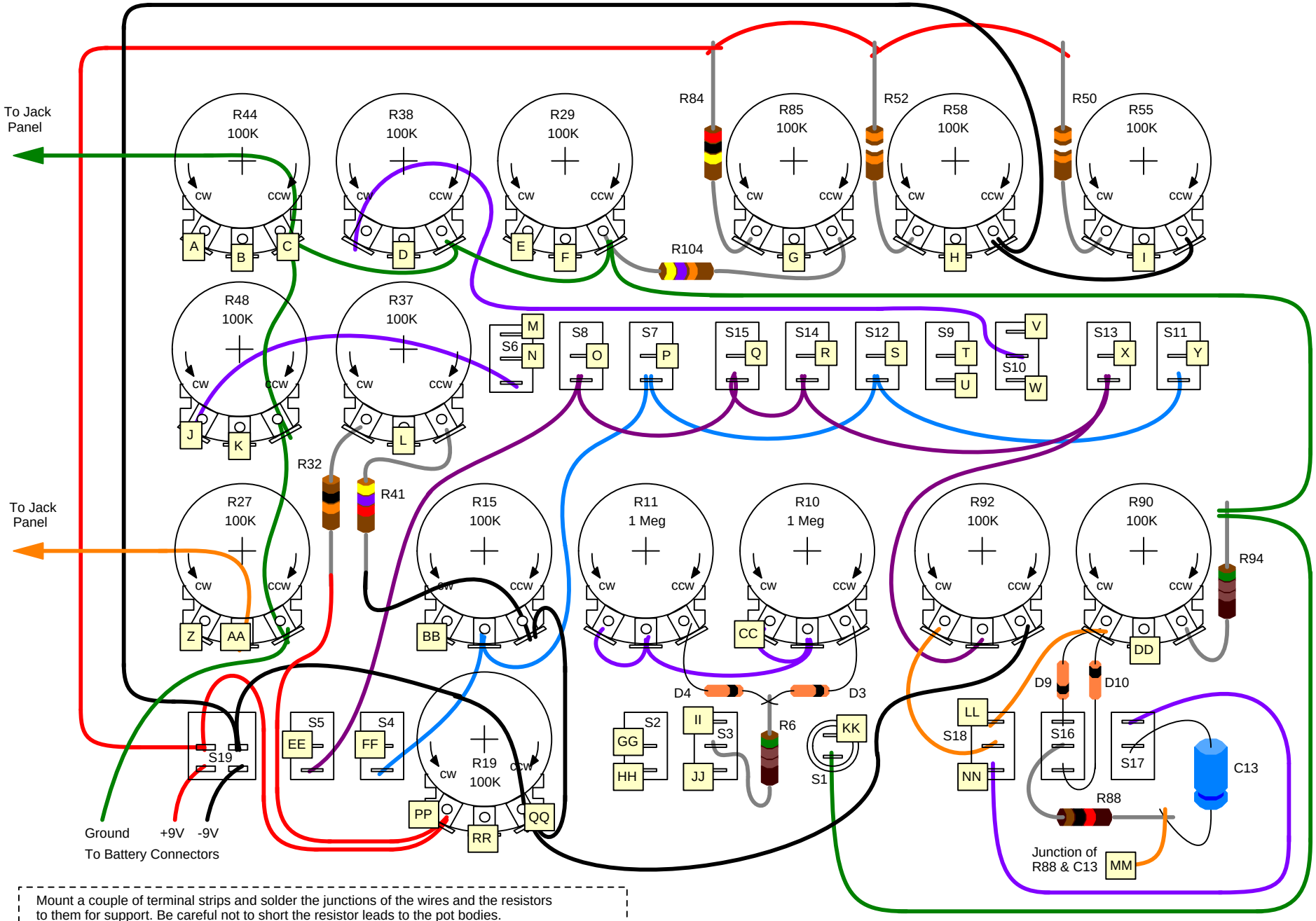

Mount a couple of terminal strips and solder the junctions of the wires and the resistors to them for support. Be careful not to short the resistor leads to the pot bodies.